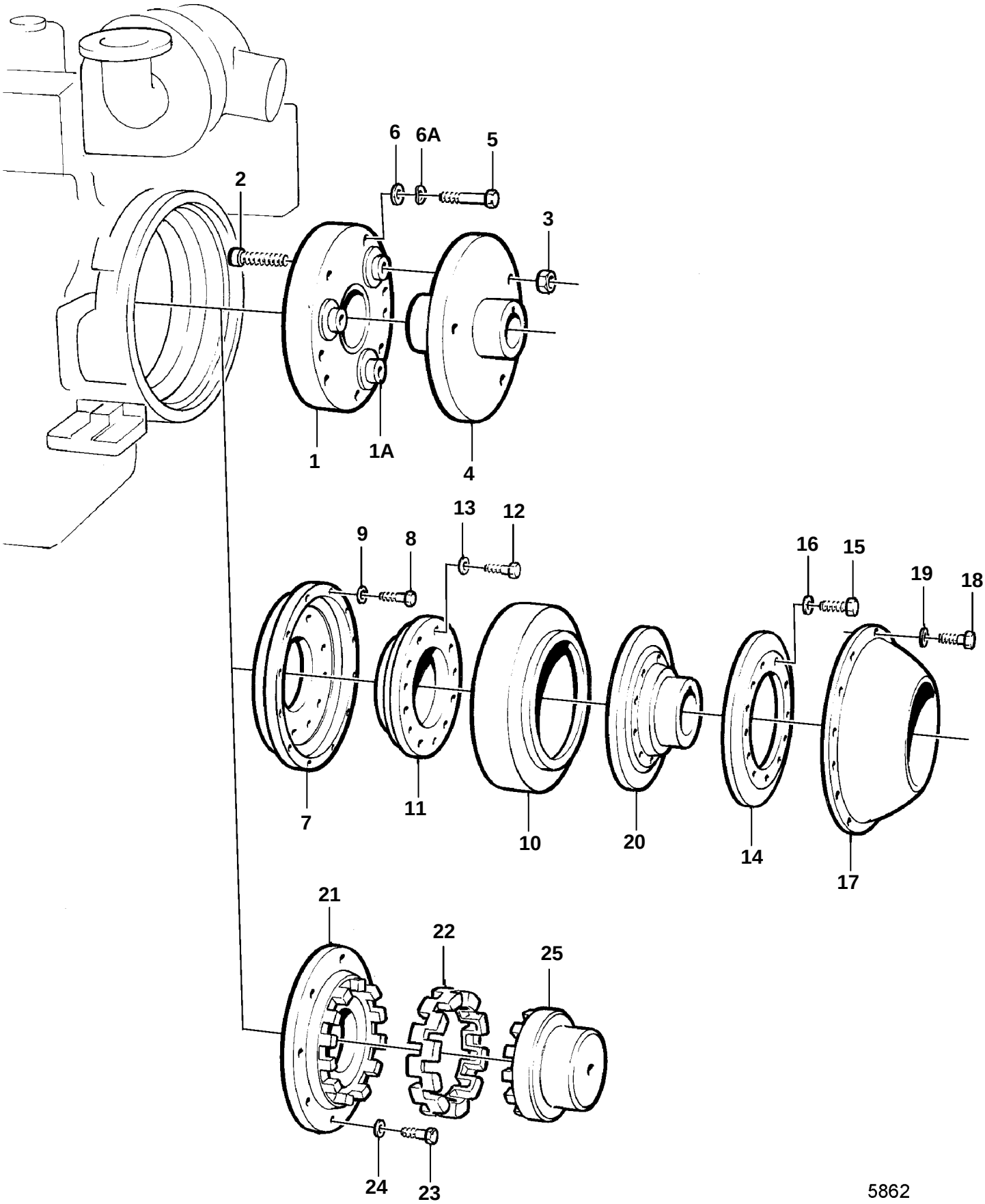
6
6A
5
2
3
1
1A
4
13
12
9
8
16
15
19
18
7
11
10
20
14
17
21
22
25
24
23
5862

REF	PART NO.	QTY	DESCRIPTION		NOTES
7	896751	1	Companion flange		FOR M18 BOLTS.
8	955562	8	Screw		FOR M18 BOLTS.
9	940280	8	Spring washer		FOR M18 BOLTS.
10	807666	1	Rubber element		FOR M18 BOLTS.
11	801663	1	Clamping ring		FOR M18 BOLTS.
12	190522	12	Screw		FOR M18 BOLTS.
13	940143	12	Lock washer		FOR M18 BOLTS.
14	807674	1	Clamping ring		FOR M18 BOLTS.
15	955366	12	Screw		FOR M18 BOLTS.
16	941912	12	Spring washer		FOR M18 BOLTS.
17	898425	2	Protecting casing		FOR M18 BOLTS.
18	940134	12	Screw		FOR M18 BOLTS.
19	941909	12	Spring washer		FOR M18 BOLTS.
20	899953	1	Clutch flange		FOR M18 BOLTS.